BNSF RAILWAY | 2700 CU. FT. COVERED HOPPER | ATSF 350100-350349

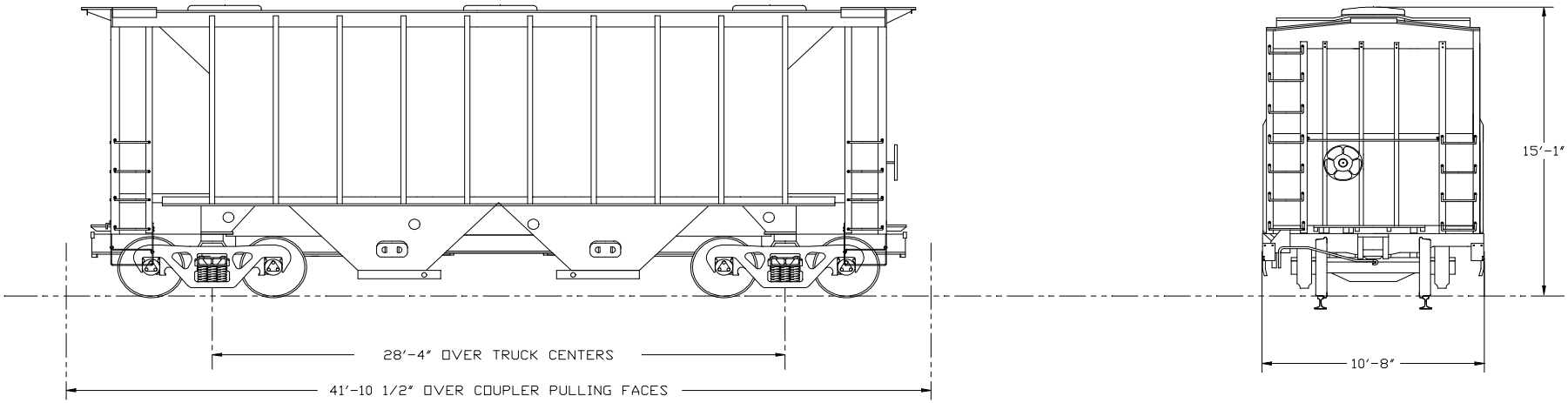

GENERAL CAR INFO

Built date	1979
Car builder	Greenville
AFE number	
AAR Mech. Des.	LO
AAR Car Code	
GST Code	
Type unloading	Gravity
Clearance plate	B
C.G. - Empty	59.7"
C.G. - Full to Eaves	97.2"
Min. curve-Coupled	153'
Min. curve-Uncoupled	142'
Braking ratio - Empty	NA
Braking ratio - Loaded	NA
Braking ratio - H.B.	NA

DIMENSIONS/CAPACITIES

Length (strikers)	39'-3"
Coupled length	41'-10 1/2"
Truck ctrs.	28'-4"
Inside length	34'-4 1/4"
Inside width	9'-11 5/8"
Width (over eaves)	10'-7 1/4"
Extreme width	10'-8"
Extreme height	15'-1"
Volume	2,700 cu. ft.
Gross rail load	263,000 lbs.
Lightweight	57,300 lbs.
Load limit	205,700 lbs.
Pinion ctr hgt (Loaded)	NA
Pinion offset	NA
Outlet gate size	13" x 24", 4/car
Hatch diameter	30", 6/car
Min. gate clearance	NA

SPECIALTY SUPPLIERS AND PART NUMBERS

Truck type	ASF	Brake system	Body mounted
Bolster pattern/AAR code	B9S-64PJ-FX	Control valve	ABDW
S.F. patt./AAR code	F9C-03BN-UA	Brake cylinder	10" x 12"
Truck spring group	6-OC0D5,6-IC-D6,4-IIC-D6A	Slack adjuster	SAB, DRV. 2USA-DJ
Snubbing type	S-2-C	Brake shoes	2" Comp.
Snubber spring group	2-OC-791, 2-IC-792	Handbrake	Klasing 1500
Supp. Snubber	HS-7	Brake Beams	#18 unit
Column wear plate	NA	Hatch cover	NA
Pedestal roof liners	NA	Outlet gate	Miner
Wheels	See Note	Running Boards	Apex Perf. plate
Roller bearing	6 1/2" x 12"		
Adapter	NA		
Truck side bearing	688-B		
Center plate	16"-#5532-E		
Vertical wear ring	NA		
Coupler/Knuckle	E60C-HT		
Follower	Fabricated		
Yoke	Y40A-HT		
Draft sill/Striker assy.	Fabricated		
Cp. carr. wear plt.	NA		
Uncoupling rod	CU25946A		
Draft Gear/Cushion	Mark R-500, NC-440, Waugh 735		

FORMER ROAD NUMBERS

NOTES AND EXCEPTIONS:

350100-350146 Griffin 1W Class C	350261-350278 Edgewater 1W Class U
350147-350162 Griffin 1W Class B	350279-350291 Griffin 1W Class C
350163-350207 STD. 1W Class U	350292-350300 Edgewater 1W Class B
350208-350230 Griffin 1W Class C	350301-350341 Griffin 1W Class C
350231-350245 STD. J-36 1W Class C	350342-350349 Griffin 1W Class B
350246-350260 Griffin 1W Class B	